NOSE RIB (N.R.)

NOTE: COORDINATES OF THE FINISHED RIB

STA.	0	80	160	240	267	304	341	360	385
UPP.	273.3	263.6	247	215.8	200.4	172.3	137	114.2	60
LOW.	0	0	0	0	0	1.2	7.0	14.7	60

REAR RIB (R.R.)

NOTE: COORDINATES OF THE FINISHED RIB

STA.	0	100	200	300	400	500	600	700	800	889.5	897.5
UPP.	272.5	269.5	257.7	242.7	224.7	205.4	183.4	160	135	-	108.4
LOW.	0	0	0	0	0	2.6	5.6	11.1	18.5	25.6	-

ENLARGED DETAIL OF JOGGLE CUT IN FORMING BLOCK. THIS IS TO PROVIDE A RECESS FOR THE "Z" RIB CAP.

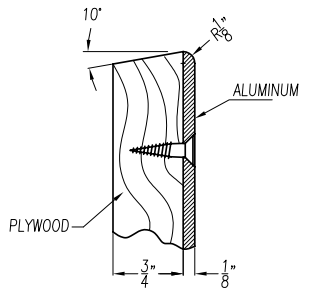

FORMING BLOCK CROSS SECTION

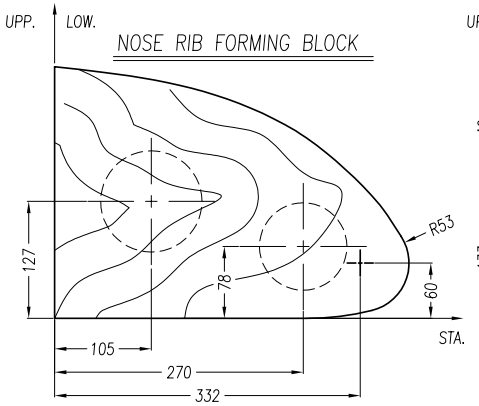

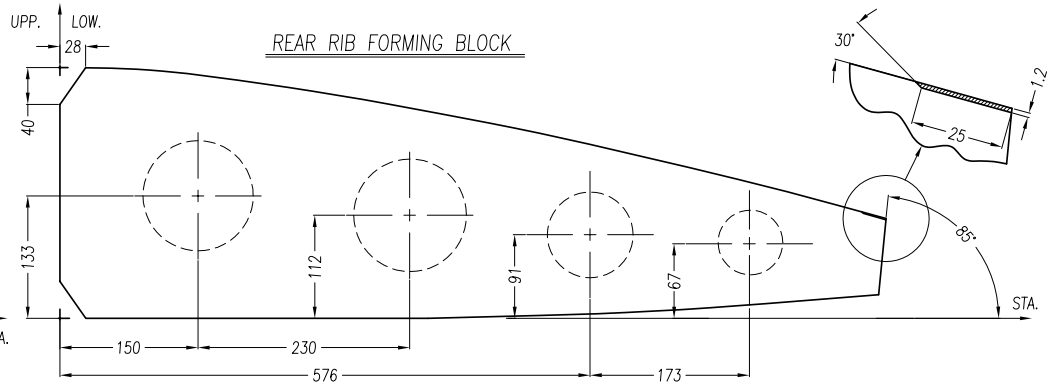

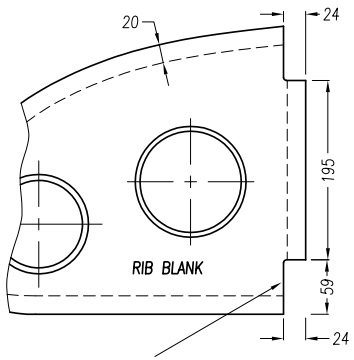

LARGER CUTOUT TO CLEAR THE SPAR CAP DOUBLER ON THE WING CENTER SECTION AND AT STAT. 130 OF THE O/B WING (6L + 6R REQ'D)

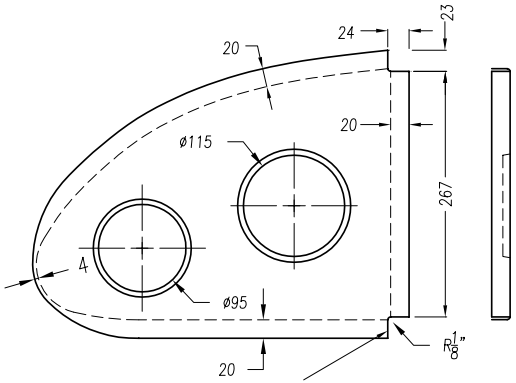

CORNER RELIEF CUTOUT OF 24X23 ON THE O/B RIBS AT STATIONS 650,1250, 1850, 2410 STD. NOSE RIB (8 REQ'D) (4L + 4R REQ'D)

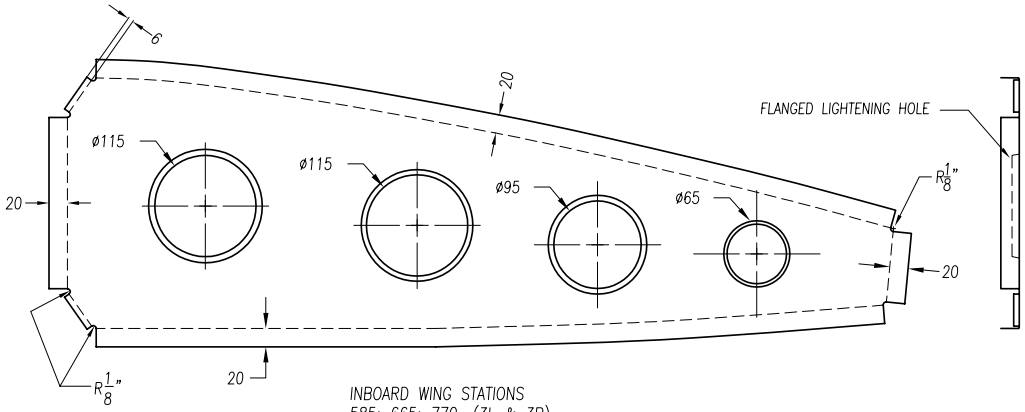

INBOARD WING STATIONS 585; 665; 770 (3L & 3R)
ALL OUTBOARD WING STATIONS (5L & 5R)

② NOSE RIB

t=.025" (10L + 10R REQ'D)

③ REAR RIB

t=.025" (8L + 8R REQ'D)

ZODIAC CH 601 HD	WING RIB FORM BLOCKS AND TEMPLATES	6-V-1

copyright ©2001 Zenith Aircraft Co. zenithair.com EDITION: 4th 05/01