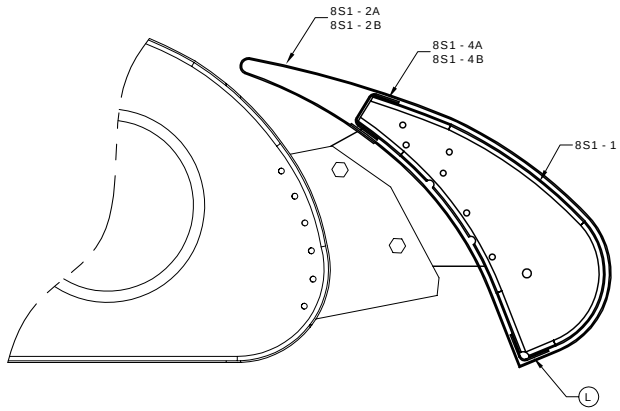

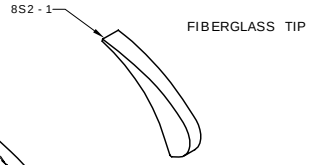

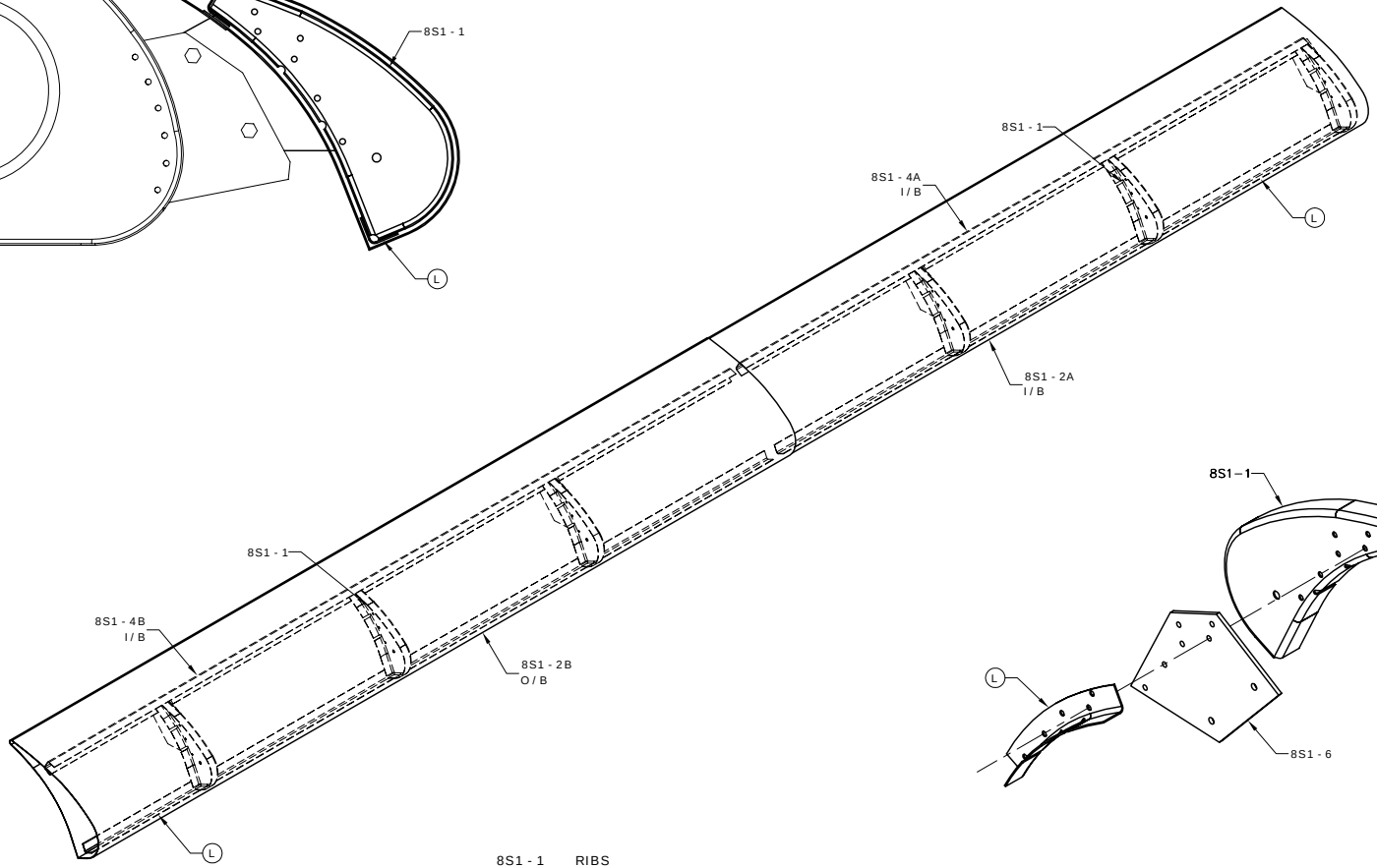

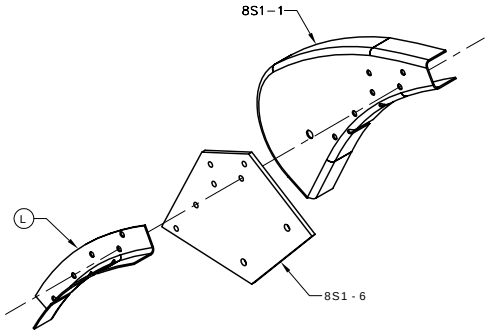

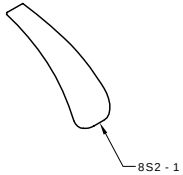

8S1 - 1	RIBS
8S1 - 2A	I / B SLAT SKIN
8S1 - 2B	O / B SLAT SKIN
8S1 - 4A	I / B REAR CHANNEL
8S1 - 4B	O / B REAR CHANNEL
8S1 - 6	SLAT SUPPORT
8S2 - 1	FIBERGLASS TIPS

STOL CH 801	ORIGINAL INFO MJM 03 / 01 / 02 REVISION INFO	DESCRIPTION SLAT: EXPLODED VIEW PARTS 8S1 - 1 TO 8S2 - 1	ASSY NO. 8XS-1
		COPYRIGHT © 2002 ZENITH AIRCRAFT CO. WWW.ZENITHAIR.COM	